HAMAMATSU
PHOTON IS OUR BUSINESS

Power supply for MPPC®

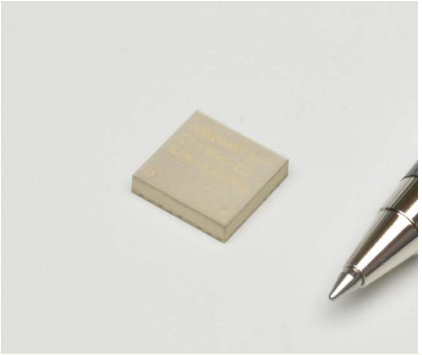

C11204-02

Bias power supply with built-in high precision temperature compensation for MPPCs

The C11204-02 is a high voltage power supply that is optimized for MPPCs (multi-pixel photon counters). It can output up to 90 V. It contains a temperature compensation function that constantly optimizes the MPPC operation even in environments with varying temperatures. It also has built-in output voltage monitor and output current monitor. All functions can be controlled from a PC via its serial interface (UART). The C11204-02 is compact and surface mount type of the C11204-01.

Features

- **Wide output voltage range: 20 V to 90 V**
- **Low ripple noise*1: 0.1 mVp-p typ.**
- **Superb temperature stability: ±10 ppm/°C typ.**
- **Finely adjustable resolution (in 1.8 mV steps)**
- **Serial interface**
- **Compact and surface mount type**

*1: No load, using the recommended circuit

Applications

- **Power supply for MPPCs**

Absolute maximum ratings

Parameter	Symbol	Condition	Value	Unit
Supply voltage	Vs		6	V
Low level input voltage	Vil	RXD, output voltage control	-0.3	V
High level input voltage	Vih	RXD, output voltage control	Vs + 0.3	V
Operating temperature	Topr	No dew condensation*2	-20 to +60	°C
Storage temperature	Tstg	No dew condensation*2	-30 to +85	°C
Reflow soldering conditions*3	Tsol		Peak temperature 240 °C, 3 times (refer to P.6)	-

*2: When there is a temperature difference between a product and the surrounding area in high humidity environment, dew condensation may occur on the product surface. Dew condensation on the product may cause deterioration in characteristics and reliability.
*3: JEDEC level4
Note: Exceeding the absolute maximum ratings even momentarily may cause a drop in product quality. Always be sure to use the product within the absolute maximum ratings.

Recommended operating conditions

Parameter	Symbol	Conditions	Min.	Typ.	Max.	Unit
Supply voltage	Vs		4.75	5	5.25	V

Electrical characteristics (Ta=25 °C, Vs=+5 V, unless otherwise noted)

Parameter	Symbol	Condition	Min.	Typ.	Max.	Unit
Current consumption	Icc	Vo=60 V, no load	-	20	40	mA
Output voltage	Vo	No load	-	20 to 90	-	V
Output current	Io		0	-	2	mA
Ripple noise*4	Vn	Vo=60 V, no load	-	0.1	0.2	mVp-p
Setting precision	-	Vo=60 V, no load	-	±10	-	mV
Setting resolution	-		-	1.8	-	mV
Temperature stability	-	25 ± 10 °C Vo=60 V, no load	-	±10	-	ppm/°C
Interface	-		Serial communication (UART)			-
Low level input voltage	Vil	RXD, output voltage control	0	-	0.4Vs	V
High level input voltage	Vih	RXD, output voltage control	0.65Vs	-	Vs	V
Low level output voltage	Vol	TXD, status monitor	-	-	2.0	V
High level output voltage	Voh	TXD, status monitor	Vs - 2.0	-	Vs	V

*4: Using the recommended circuit

Ripple noise vs. time (typical example)

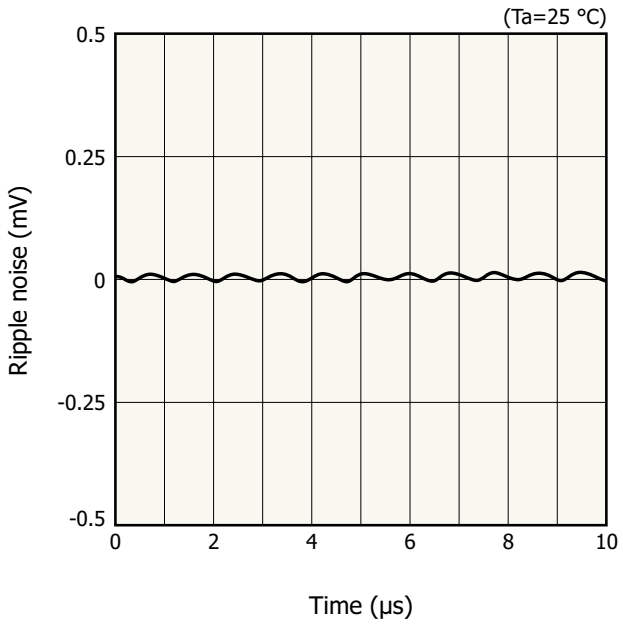

KACCB0427EA

Output voltage vs. ambient temperature

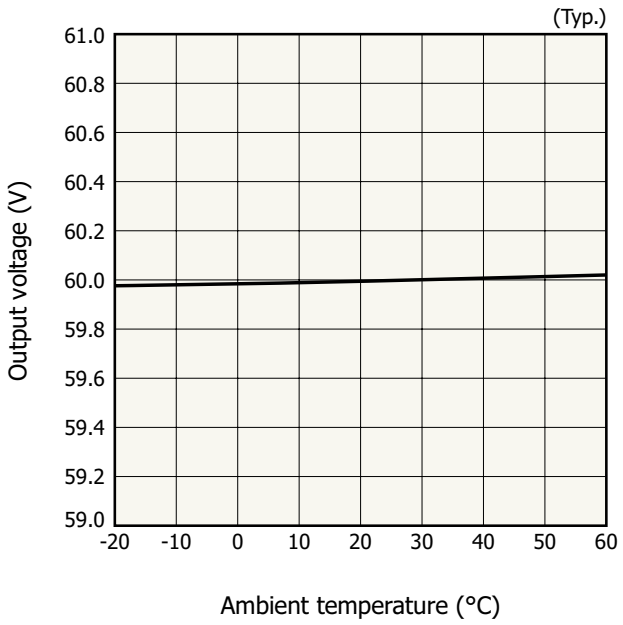

KACCB0288EB

Current consumption vs. load current

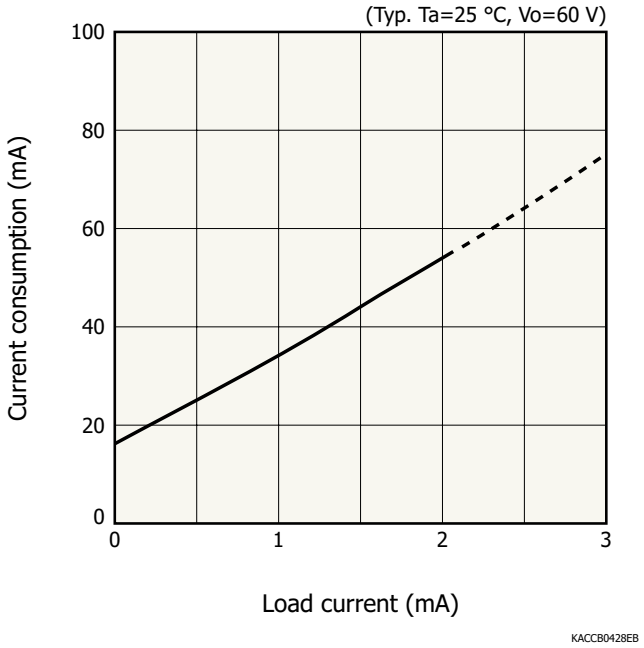

Output voltage vs. load current

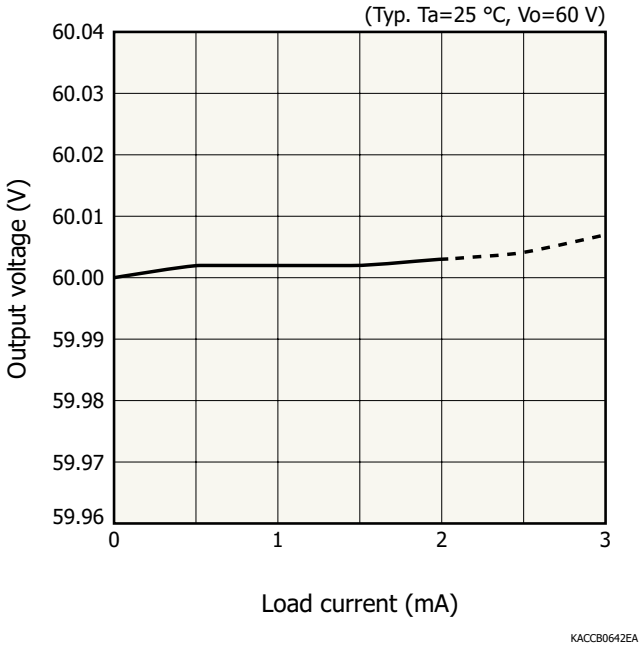

Dimensional outline (unit: mm)

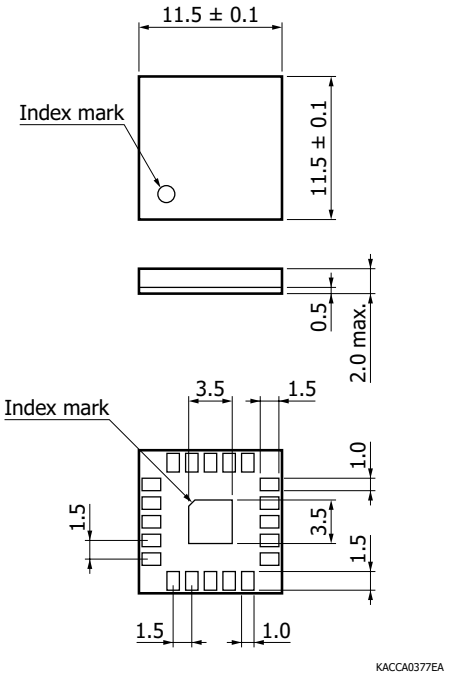

Pin connections

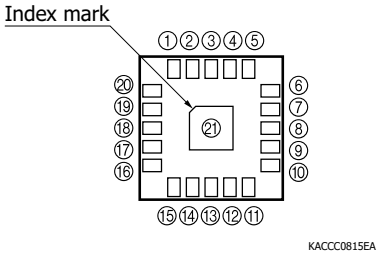

Pin no.	Symbol	Function
1	-	Status monitor. Refer to C11204-02 operation manual.
2	Temp	Connect to an analog temperature sensor
3, 5, 7, 10, 14, 15, 19, 20	NC	No connection These pins should not be connected to any terminals.
4	Vo	High voltage output
6, 9, 11, 13, 18, 21	GND	Ground Connect directly to the ground plane using the shortest wire possible.
8	Vs	Positive supply voltage Furnish a bypass capacitor to ground as close to this pin as possible.
12	Ctrl	Control output voltage
16	RXD	Serial data input
17	TXD	Serial data output

Block diagram

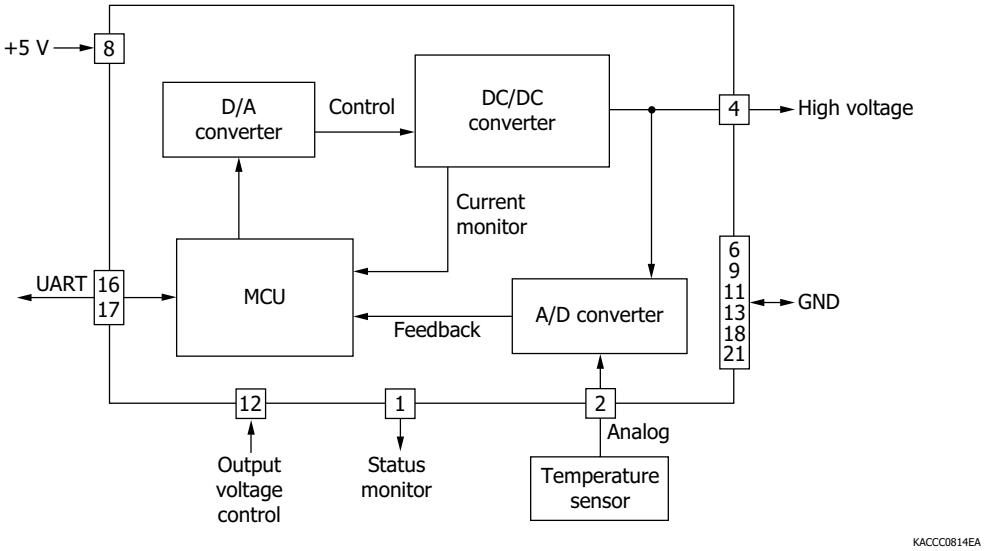

Recommended land pattern (unit: mm)

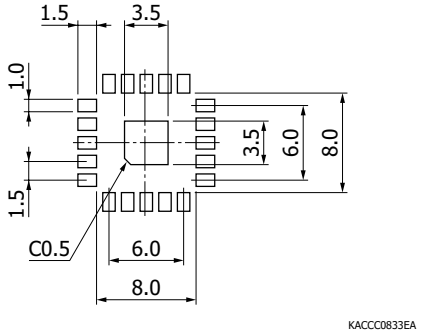

Recommended circuit

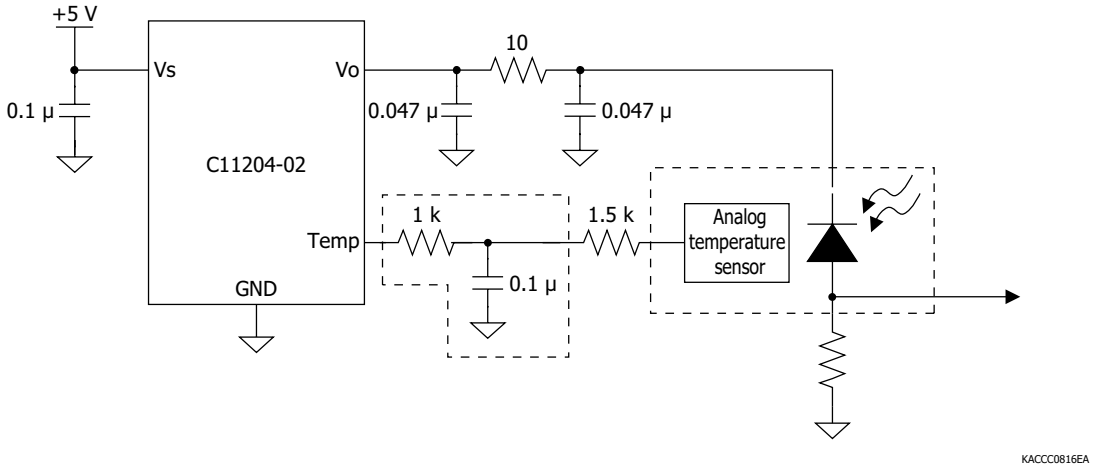

Note: For the bypass capacitor to connect to Vo, use a high-withstand-voltage, low-ESR capacitor.
Provide a noise filter near the Temp pin.

Analog temperature sensor block

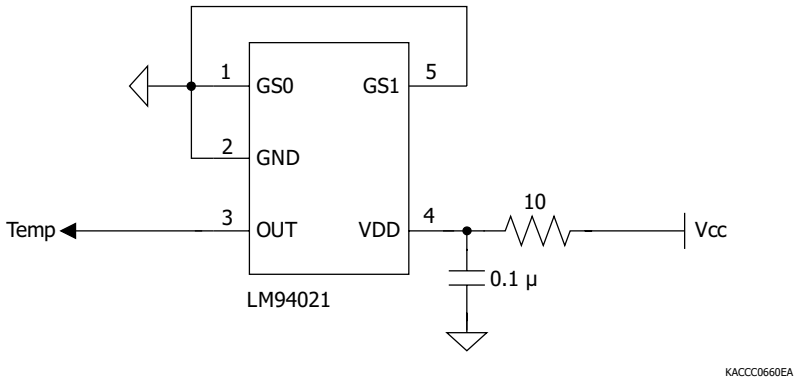

Note: For the analog temperature sensor, use the LM94021 by Texas Instruments.
Connect pins 1 and 5 of the analog temperature sensor to ground.

UART Communication specifications

Parameter	Specifications
Baud rate	38400 bps
Data bits	8
Parity bits	Even
Stop bit	1
Flow control	None

Measured example of temperature profile with our hot-air reflow oven for product testing

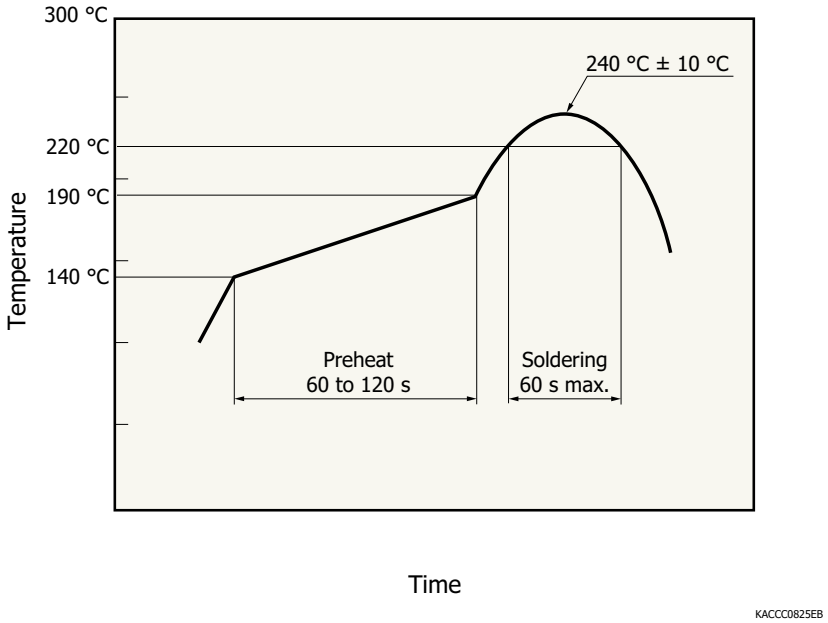

- This product supports lead-free soldering. After unpacking, store it in an environment at a temperature of 30 °C or less and a humidity of 60% or less, and perform soldering within 72 hours.
- The effect that the product receives during reflow soldering varies depending on the circuit board and reflow oven that are used. Before actual reflow soldering, check for any problems by testing out the reflow soldering methods in advance.
- When three or more months have passed or if the packing bag has not been stored in an environment described above, perform baking. For the baking method, see the related information "Surface mount type products" precautions.

Accessories

- CD-ROM (Instruction manual, Command reference)

Related product: C12332-01 Driver circuit for MPPC

The C12332-01 is a driver circuit designed for simple non-cooled MPPC evaluations. It consists of a sensor board and a power supply board. The sensor board includes an MPPC socket and a temperature sensor. The power supply board includes a C11204-01 power supply module for MPPC, an amplifier, and a USB interface board. The USB interface allows you to change the bias voltage and set the temperature compensation coefficient from a PC. The C12332-01 operates just by connecting it to an external power supply (±5 V).

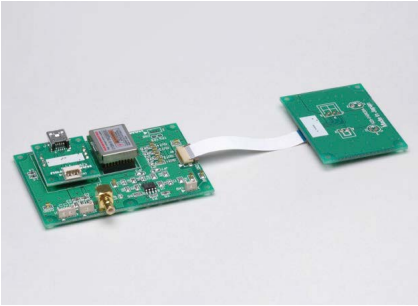

Power supply lineup for MPPCs

Photo	Type no.	Package type	Temperature stability (ppm/°C)	Features
	C11204-01	With leads	±10	High precision Low ripple noise
	C11204-02	Surface mount type	±10	High precision Low ripple noise Compact: 11.5 × 11.5 mm
	C14156	Surface mount type	±200	Low cost Compact: 7 × 7 mm

Related information

www.hamamatsu.com/sp/ssd/doc_en.html

■ Precautions
· Disclaimer
· Surface mount type products

HAMAMATSU
www.hamamatsu.com

HAMAMATSU PHOTONICS K.K., Solid State Division
1126-1 Ichino-cho, Higashi-ku, Hamamatsu City, 435-8558 Japan, Telephone: (81)53-434-3311, Fax: (81)53-434-5184
U.S.A.: Hamamatsu Corporation: 360 Foothill Road, Bridgewater, N.J. 08807, U.S.A., Telephone: (1)908-231-0960, Fax: (1)908-231-1218, E-mail: usa@hamamatsu.com
Germany: Hamamatsu Photonics Deutschland GmbH: Arzbergerstr. 10, 82211 Herrsching am Ammersee, Germany, Telephone: (49)8152-375-0, Fax: (49)8152-265-8, E-mail: info@hamamatsu.de
France: Hamamatsu Photonics France S.A.R.L.: 19, Rue du Saule Trapu, Parc du Moulin de Massy, 91882 Massy Cedex, France, Telephone: (33)1 69 53 71 00, Fax: (33)1 69 53 71 10, E-mail: infos@hamamatsu.fr
United Kingdom: Hamamatsu Photonics UK Limited: 2 Howard Court, 10 Tewin Road, Welwyn Garden City, Hertfordshire AL7 1BW, UK, Telephone: (44)1707-294888, Fax: (44)1707-325777, E-mail: info@hamamatsu.co.uk
North Europe: Hamamatsu Photonics Norden AB: Torshamnsgatan 35 16440 Kista, Sweden, Telephone: (46)8-509 031 00, Fax: (46)8-509 031 01, E-mail: info@hamamatsu.se
Italy: Hamamatsu Photonics Italia S.r.l.: Strada della Moia, 1 int. 6, 20044 Arese (Milano), Italy, Telephone: (39)02-93 58 17 33, Fax: (39)02-93 58 17 41, E-mail: info@hamamatsu.it
China: Hamamatsu Photonics (China) Co., Ltd.: 1201 Tower B, Jiaming Center, 27 Dongsanhuan Beilu, Chaoyang District, 100020 Beijing, P.R.China, Telephone: (86)10-6586-6006, Fax: (86)10-6586-2866, E-mail: hpc@hamamatsu.com.cn
Taiwan: Hamamatsu Photonics Taiwan Co., Ltd.: 8F-3, No. 158, Section2, Gongdao 5th Road, East District, Hsinchu, 300, Taiwan R.O.C. Telephone: (886)3-659-0080, Fax: (886)3-659-0081, E-mail: info@hamamatsu.com.tw

Cat. No. KACC1242E07 Oct. 2021 DN